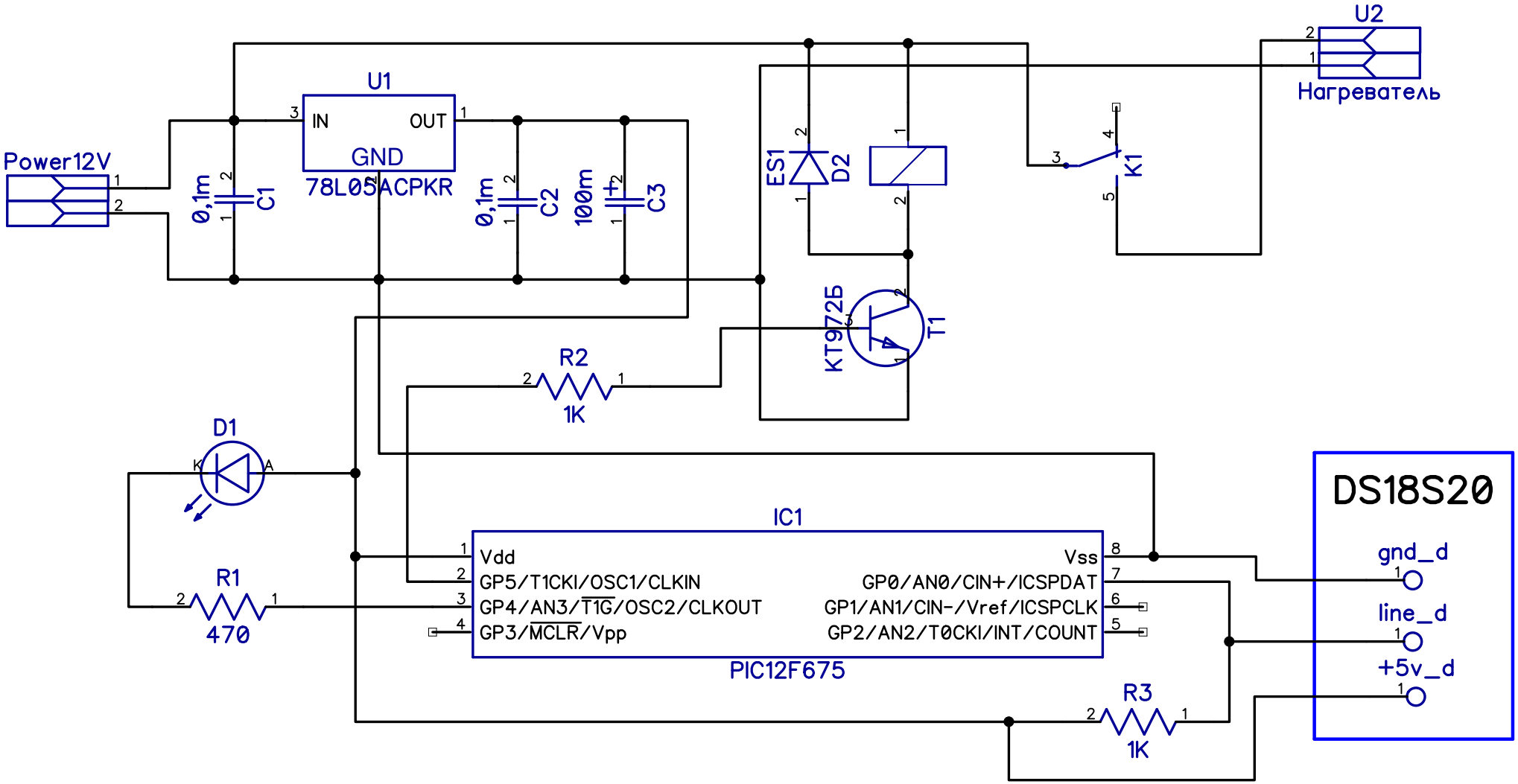
Power12V
U1
IN
OUT
GND
78L05ACPKR
0,1m
C1
0,1m
C2
100m
C3
ES1
D2
K1
U2
Нагреватель
KT972Б
T1
R2
1K
D1
K
A
R1
470
IC1
Vdd
GP5/T1CKI/OSC1/CLKIN
GP4/AN3/T1G/OSC2/CLKOUT
GP3/MCLR/Vpp
Vss
GP0/AN0/CIN+/ICSPDAT
GP1/AN1/CIN-/Vref/ICSPCLK
GP2/AN2/T0CKI/INT/COUNT
PIC12F675
R3
1K
DS18S20
gnd_d
line_d
+5v_d